OKCE S

ELECTRIC WATER HEATERS AND STORAGE TANKS

FLOOR-STANDING FOR CONNECTING THE HEAT PUMP

- All storage tanks have inlet/outlet for circulation connection
- Installation of TPK 210-12 flanged heating unit required
- Storage tanks with capacities of 200-500 l have an inlet/outlet for TJ ⅝" heating unit
- Model 750 and 1000 have a removable thermal insulation

Typee of storage tank		OKCE 160 S	OKCE 200 S	OKCE 250 S	OKCE 300 S
Order number		1106115101	1107115101	1109115101	121011501
Capacity	[l]	157	210	250	300
Max. weight of the empty water heater	[kg]	52	72	76	80
Insulation thickness	[mm]	42			60
Thermal conductivity of the insulation	[W•m⁻¹•K⁻¹]	0,022			0,021
Power consumption of the el. heating unit	[W]	according to the Typee of accessories			
Heating time from 10 °C to 60 °C	[h]	according to the Typee of accessories			
Electrical connection		according to the Typee of accessories			
Recommended circuit breaker size	[A]	according to the Typee of accessories			
Degree of protection		according to the Typee of accessories			
Max. operating temp. / overpressure in tank	[°C]/[bar]	80/6			80/10
Energy efficiency class		C			
Annual consumption	[kWh•a⁻¹]	2612	4301	4215	4361
Mixed water V40	[l]	235,47	362,16	418,23	419,08

Dimensions [mm]	A	B	C	D	E	F	G	I	J
OKCE 160 S	1045	660	710	584	75	962	515	–	285
OKCE 200 S	1355	660	710	584	75	1275	855	810	285
OKCE 250 S	1535	660	710	584	75	1455	1055	810	285

SOCKET no. 1 ¾" outer
SOCKET no. 2 ¾" inner
SOCKET no. 3 ⅝" inner

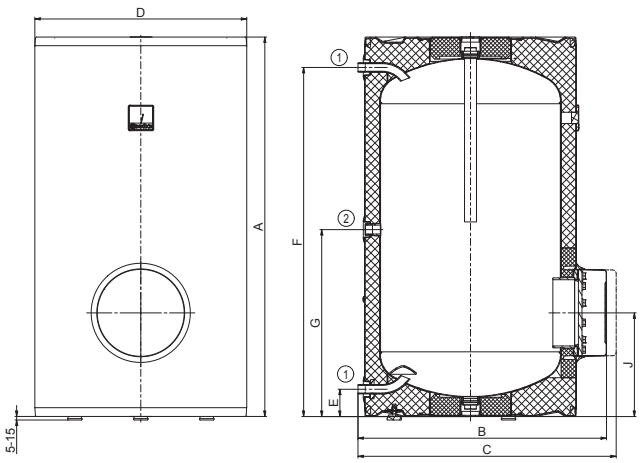

OKCE 160 S

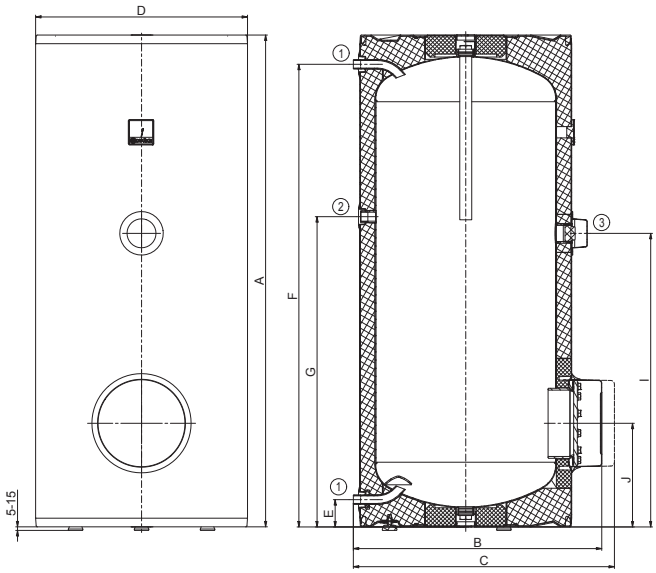

OKCE 200 S, 250 S

Dimensions [mm]	A	B	C	D	E	F	G	I	J
OKCE 300 S	1558	750	810	670	77	1579	760	895	325

SOCKET no. 1 1" outer
SOCKET no. 2 ¾" inner
SOCKET no. 3 ¾" inner

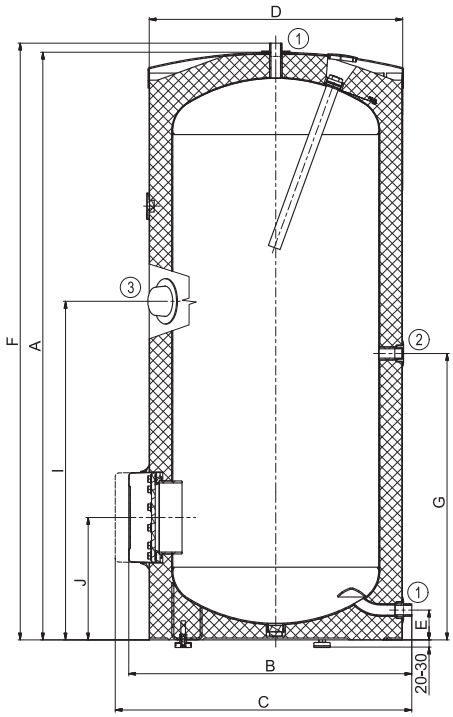

OKCE 300 S

Dimensions [mm]	A	B	C	D	E	F	G	I	J	P	R
OKCE 500 S	1924	800	860	700	55	1790	1264	1040	287	380	1409

SOCKET no. 1 1" outer
SOCKET no. 2 ¾" inner
SOCKET no. 3 ½" inner
SOCKET no. 4 ¾" inner

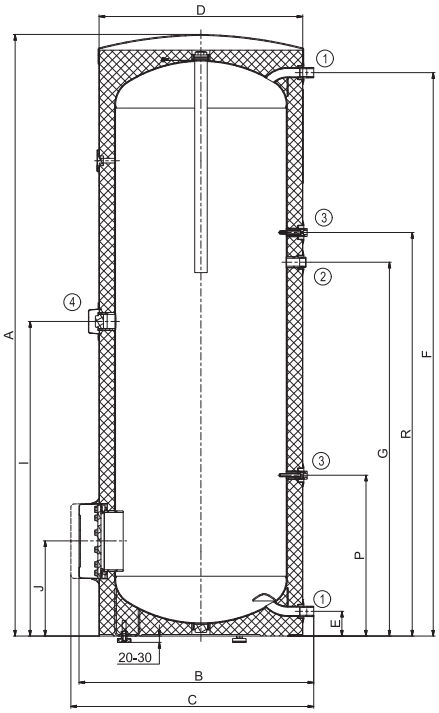

OKCE 500 S